DESIGN AND DEVELOPMENT OF A NEW SRF CAVITY CRYOMODULE FOR THE ATLAS INTENSITY UPGRADE

M. Kedzie[1], Z. A. Conway[1], J. D. Fuerst[1], S. M. Gerbick[1], M. P. Kelly[1], J. Morgan[1], P. N. Ostroumov[1], M. O'Toole[1], and K. W. Shepard[2]

[1]Argonne National Laboratory
Argonne, IL, 60439, U.S.A.

[2]TechSource, Inc.
Los Alamos, NM, 87544, U.S.A.

ABSTRACT

The ATLAS heavy ion linac at Argonne National Laboratory is undergoing an intensity upgrade that includes the development and implementation of a new cryomodule containing four superconducting solenoids and seven quarter-wave drift-tube-loaded superconducting rf cavities. The rf cavities extend the state of the art for this class of structure and feature ASME code stamped stainless steel liquid helium containment vessels. The cryomodule design is a further evolution of techniques recently implemented in a previous upgrade [1]. We provide a status report on the construction effort and describe the vacuum vessel, thermal shield, cold mass support and alignment, and other subsystems including couplers and tuners. Cavity mechanical design is also reviewed.

INTRODUCTION

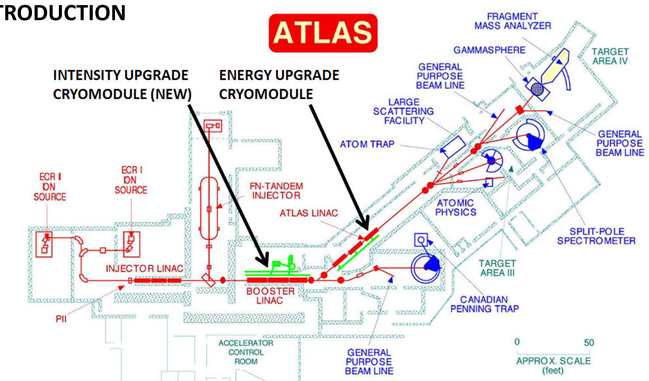

The Argonne Tandem Linac Accelerator System (ATLAS) is a national user facility supported by the U.S. Department of Energy Office of Nuclear Physics. As the world's first superconducting linear accelerator for heavy ions [2], ATLAS has operated since 1985 hosting several hundred users each year from around the world and providing heavy-ion beams to experimenters with a 95% availability.

NIOBIUM CAVITIES

Cavity geometry is created and optimized using CST Microwave Studio. Mechanical design is performed using ANSYS, Pro/Engineer, and AutoCAD Inventor. The design is optimized to reduce microphonics and sensitivity to helium pressure fluctuations.

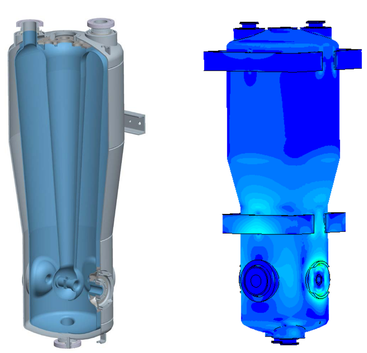

CRYOMODULE

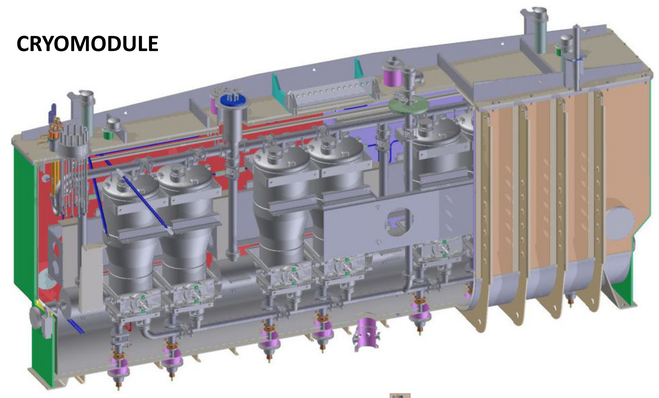

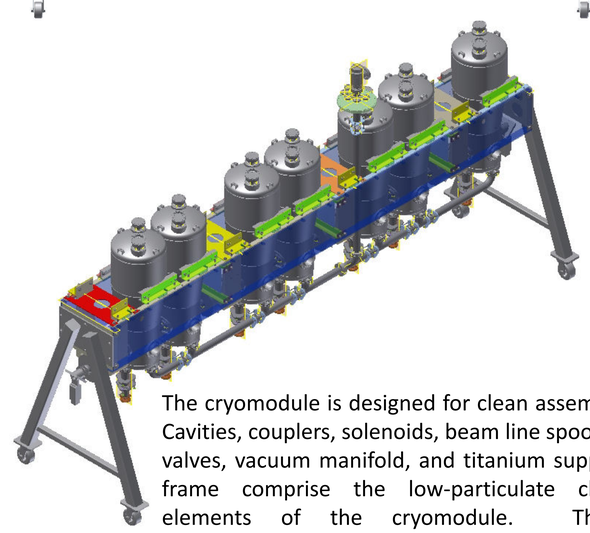

The cryomodule is designed for clean assembly. Cavities, couplers, solenoids, beam line spools & valves, vacuum manifold, and titanium support frame comprise the low-particulate clean elements of the cryomodule. These components are all cleaned, high-pressure rinsed, assembled, and hermetically sealed in a class 100 assembly area prior to installation beneath the cryomodule top plate.

HELIUM VESSEL

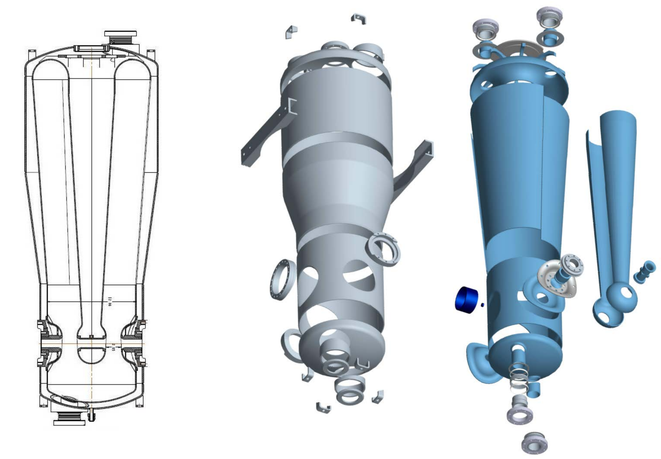

The helium vessels surrounding the niobium cavity are fabricated using 304L stainless steel. They are built to the ASME boiler & pressure vessel code and carry an ASME code stamp. Copper brazes join the niobium to the SS at six locations: both beam ports, two upper coupling ports, and two lower coupling ports. The pressure boundary is defined to pass through the SS nozzles at the braze assemblies such that the niobium cavity is not included as part of the pressure vessel.

FABRICATION

The cavities are fabricated from RRR≥250 niobium. Forming and machining were performed by Advanced Energy Systems, Inc., Medford NY. Additional machining was done by Numerical Precision, Inc., Wheeling IL. Wire EDM (electric discharge machining) was used extensively to trim "flash" from the formed parts and to adjust part lengths for proper frequency. This work was performed both by Numerical Precision and by Adron, Tool Corp., Menomonee Falls WI. Benefits include easier fixturing of parts, low cost, and zero risk of inclusions. This last item is significant due to the risk of blowout during electron beam (EB) welding caused by the presence of foreign material such as a piece of broken toolbit in the weld joint.

This work was supported by the U.S. Department of Energy, Office of Nuclear Physics, under contract No. DE-AC02-06CH11357.

Argonne NATIONAL LABORATORY

U.S. DEPARTMENT OF ENERGY
Office of Science