IPAC 2015

Advances in CW Ion Linacs

P.N. Ostroumov

May 8, 2015

Content

- Two types of CW ion linacs
- Example of a normal conducting CW RFQ
- Cryomodule design and performance
- High performance quarter wave and half wave SC resonators
- RF couplers, tuners
- SC solenoids
- Applications of CW linacs

Superconducting CW Ion Linear Accelerators

- Only SC technology can support CW ion linacs if required beam energy is above several MeV/u
- Heavy-ion linacs, beam space charge is not significant beyond the ion sources
  - Low energy (< 25 MeV/u) heavy ion linacs with stable beams for nuclear physics
  - SPIRAL2 linac at GANIL
  - Driver accelerators for production of radioactive beams (FRIB, RAON: 200 MeV/u, 400 kW)
  - Post accelerators for radioactive beams
- Linacs for light ions: Protons, H-minus and deuterons. Beam space charge is significant
  - Deuteron linac for IFMIF (International Fusion Materials Irradiation Facility)
  - FNAL proton driver: 800 MeV pulsed linac with CW front end (Phase I)
  - A CW high-power linacs for ADS
  - Potentially can deliver 100 MW proton beams

Transition from NC to SC accelerating structures

- Normal conducting RFQ accelerator is the best option
- What happens at transition?
  - Focusing period is longer
  - Higher accelerating gradients available
  - Strong coupling of transverse and longitudinal motion can take place
- Heavy ion Linacs: 300-500 keV/u
  - High accelerating gradients can be effectively used due to m/q>1
- Light ion Linacs (protons, H-minus, deuterons): 2-7 MeV
  - Higher energy is better to suppress space charge effects, limited by complexity and cost of a NC RFQ
- In the SC section (low and medium energies) compact accelerating-focusing structures are required
  - Short focusing periods to control space charge
  - Possibility to apply high accelerating gradients
  - Avoid long drift spaces to minimize amplification of phase errors

New ANL 60.625 MHz CW RFQ

- 4-meter long
- Designed and built in 3 years
- 2.5 years in operation
- q/A=from 1 to 1/7
- Trapezoidal modulation
- High shunt impedance: 60 kW is sufficient to produce 2.1 MV effective acc. voltage
- Multi-harmonic external buncher to form very low longitudinal emittance
- Electrostatic beamline
- Directly attached to SC cryomodule

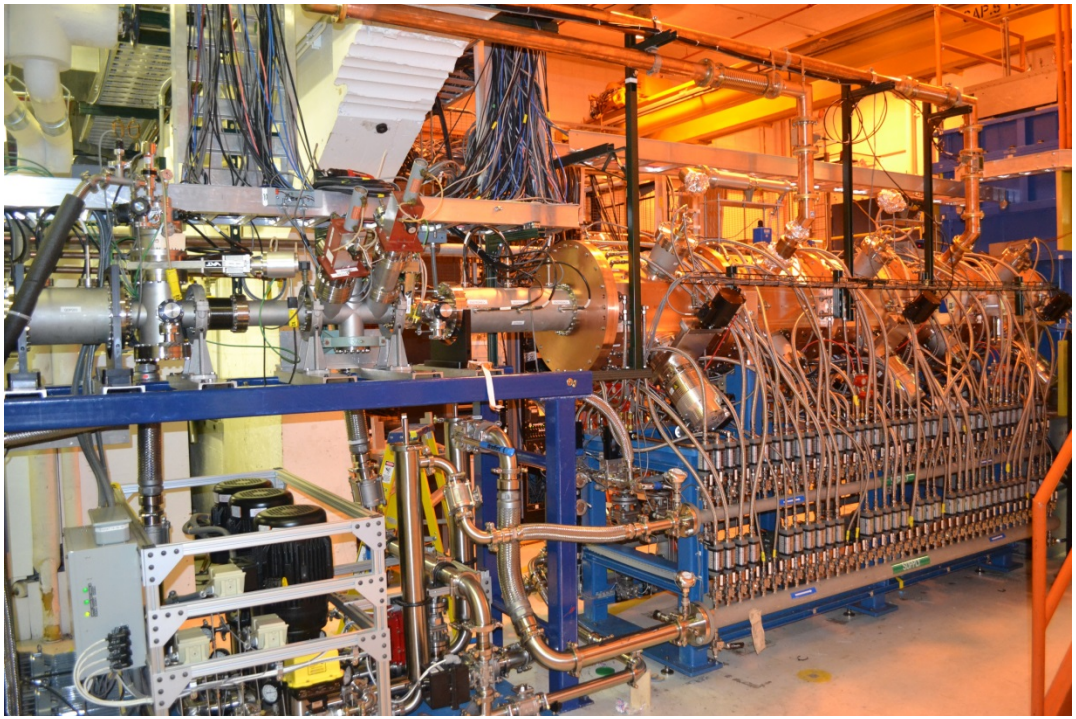

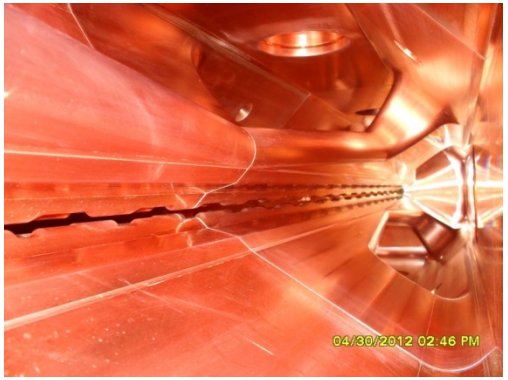

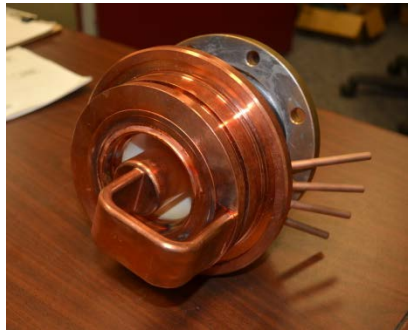

Highlights of the new ANL 60.625 MHz CW RFQ

- Highly coupled electromagnetic structure
  - "Flat" field distribution, non-operational modes are separated by more than 10 MHz
  - "Bead-pull" tuning is not required
- Conservative design, peak field is 1.65 Kilpatrick in local spots
- Equipped with a short output radial matcher to form an axially-symmetric beam
- No "cold model"– was directly built from CST MWS geometry
- Fabrication: 2-step brazing in a high temperature furnace
- Measured Q-factor is ~94% of the MWS calculated Q for annealed OFE copper

Bunch Shape, Energy Spread and Transverse Profile

- Off-line testing without external buncher
- Simulation with TRACK code

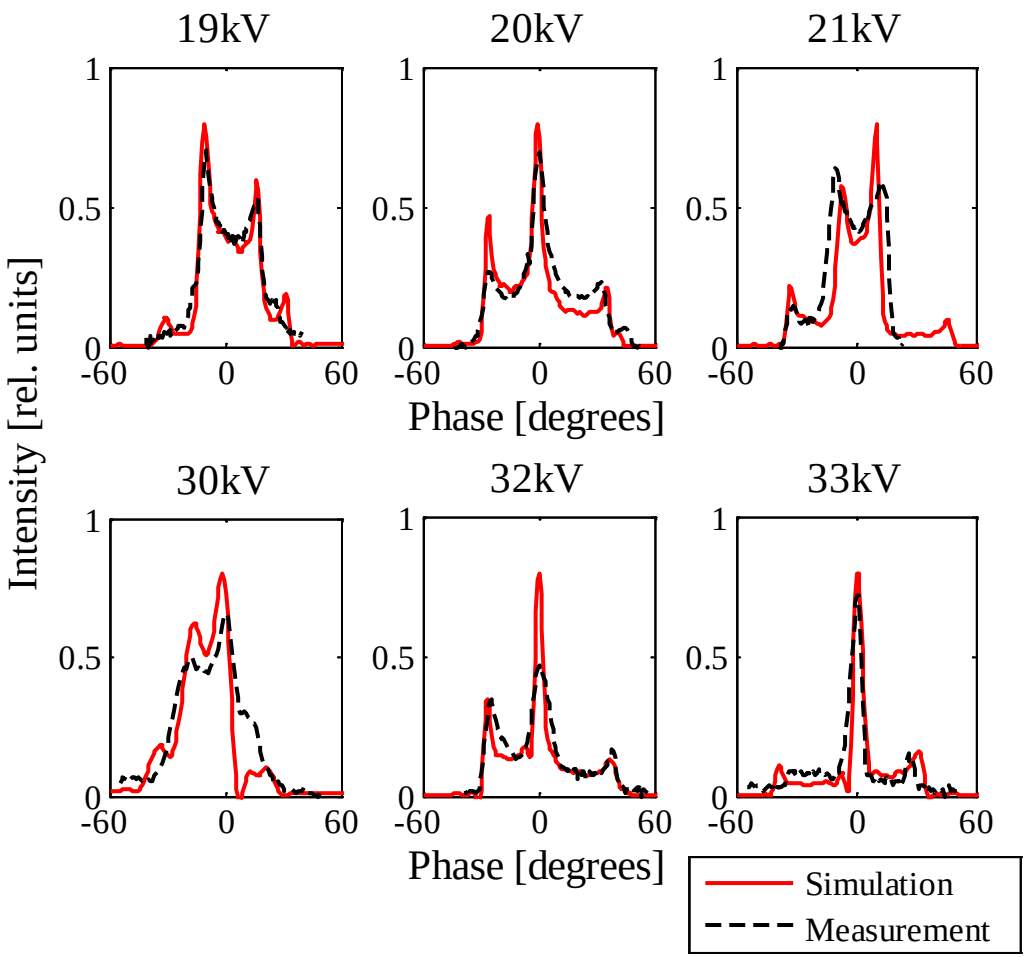

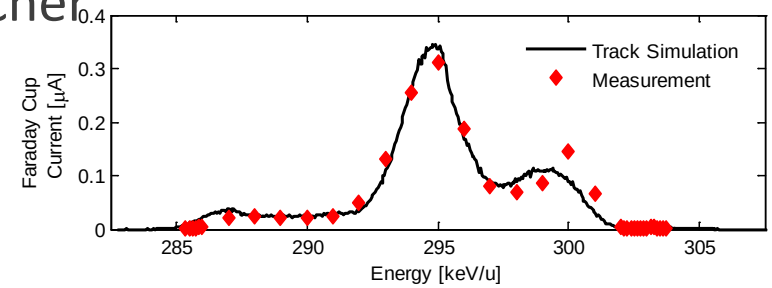

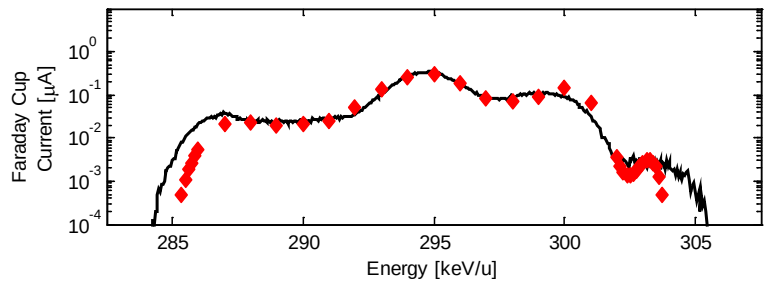

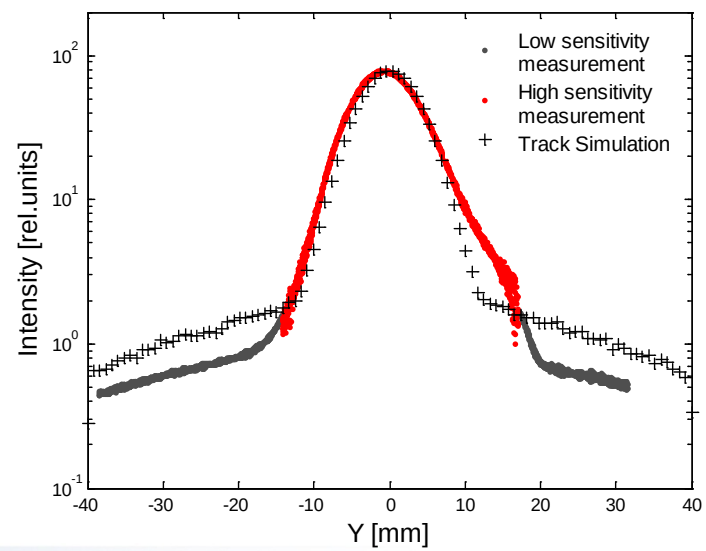

QWRs and HWRs

- New approach in the EM design and optimization
  - Conical shape to reduce peak magnetic field
  - Minimized RF losses: high shunt impedance and geometry factor
  - Integrated with the fabrication, processing and cleaning plans
  - Correction of dipole and quadrupole components
- Efficiently uses available space in the cryostat keeping the longitudinal dimension very compact

	QWR	HWR
Frequency, MHz	72.75	162.5
Optimal beta	0.077	0.112
V_{design}, MV	2.5	2.0
E_P/E_{ACC}, MV/m	5.16	4.7
B_P/E_{ACC}, mT/MV/m	7.6	5.0
G, Ohm	26	48
R_{sh}/Q, Ohm	575	271

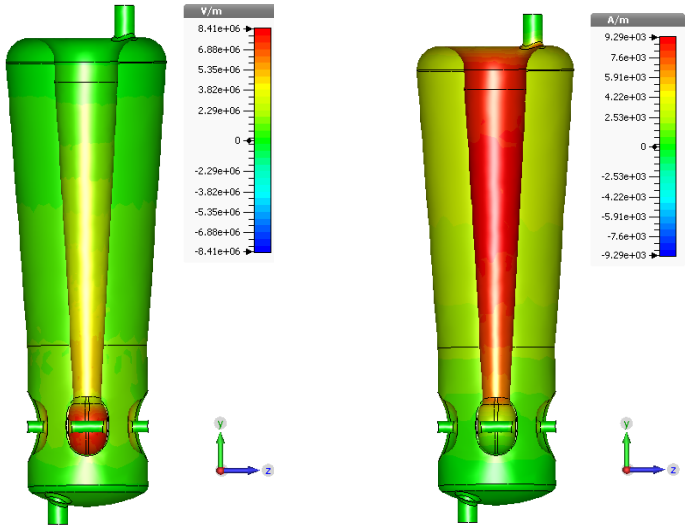

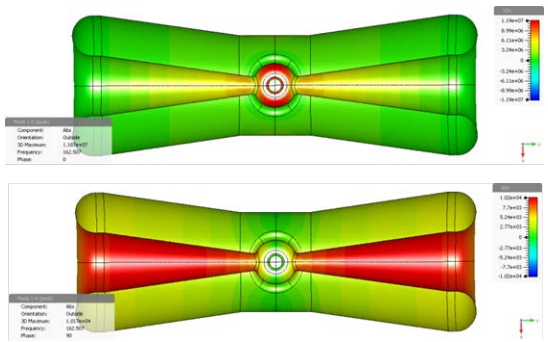

E-field

B-field

Compact Cryomodule Design

- Long cryomodule
  - Reduced drift spaces
  - Reduced heat load
- High packing factor
  - Reduced drift spaces
  - Short focusing period
- Separate vacuum
  - Clean RF space
- Titanium strongback
  - Facilitates easy alignment
- SS vessel, room temperature magnetic and thermal shield

Seven 72.75 MHz QWRs and 4 solenoids

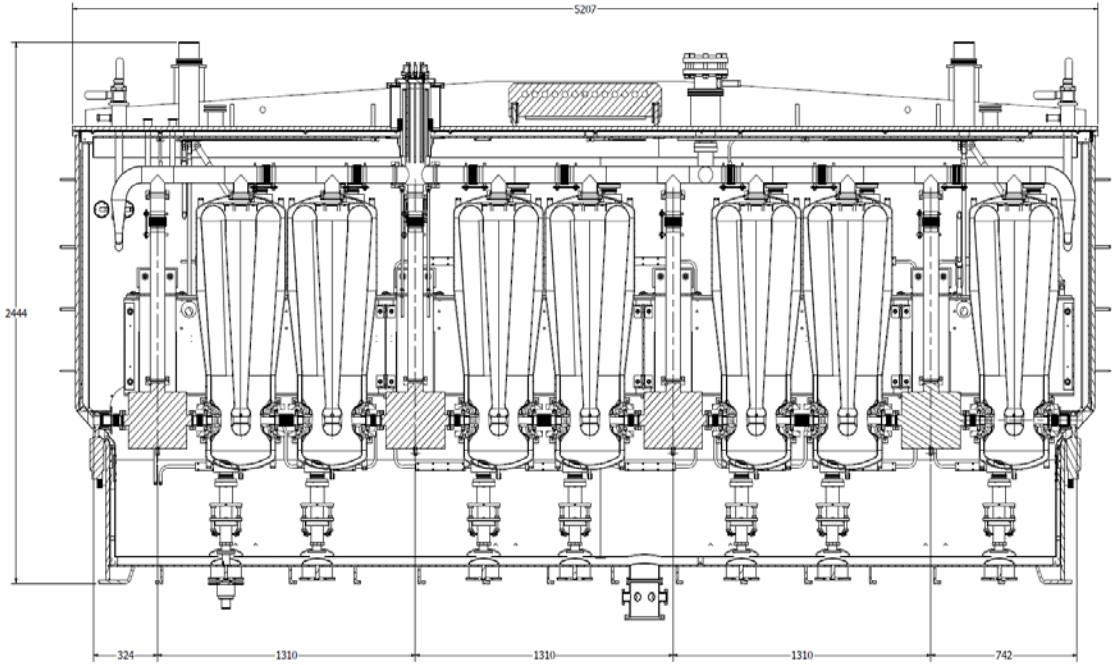

Eight 162.5 MHz HWRs, 8 solenoids and 8 BPMs

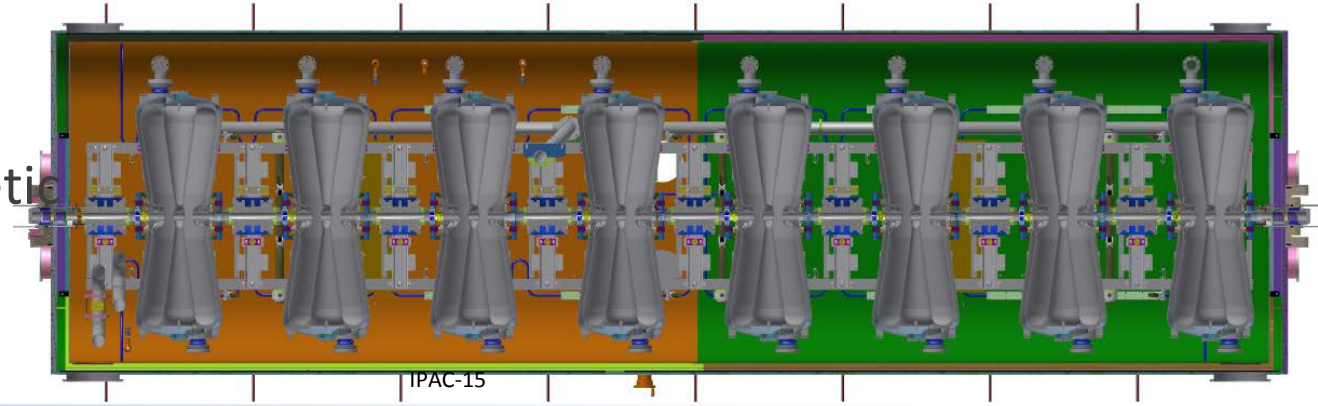

Engineering Analysis of Jacketed Cavity and Mechanical Design

- Mechanical stresses and displacements in niobium and SS vessel, compliance with pressure vessel code, safety analysis
- Minimization of frequency sensitivity to He pressure fluctuation, df/dP
- FEA analysis of the slow tuner, stresses and displacements
- In addition:
  - **Provide an overall compact mechanical design to maintain a high real estate accelerating gradient;**
  - **Provide coupling ports enabling advanced RF surface processing techniques;**
  - **Integrate a coupling port;**
  - **Facilitate the integration of several cavities and their sub-systems (RF coupler and tuners) into the cryomodule;**
  - **Provide a means for cavity alignment in the cryomodule;**
  - **Create a complete set of fabrication drawings.**

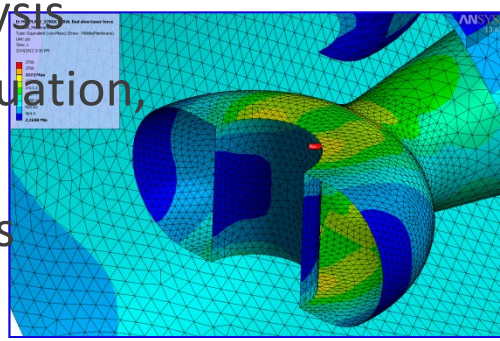

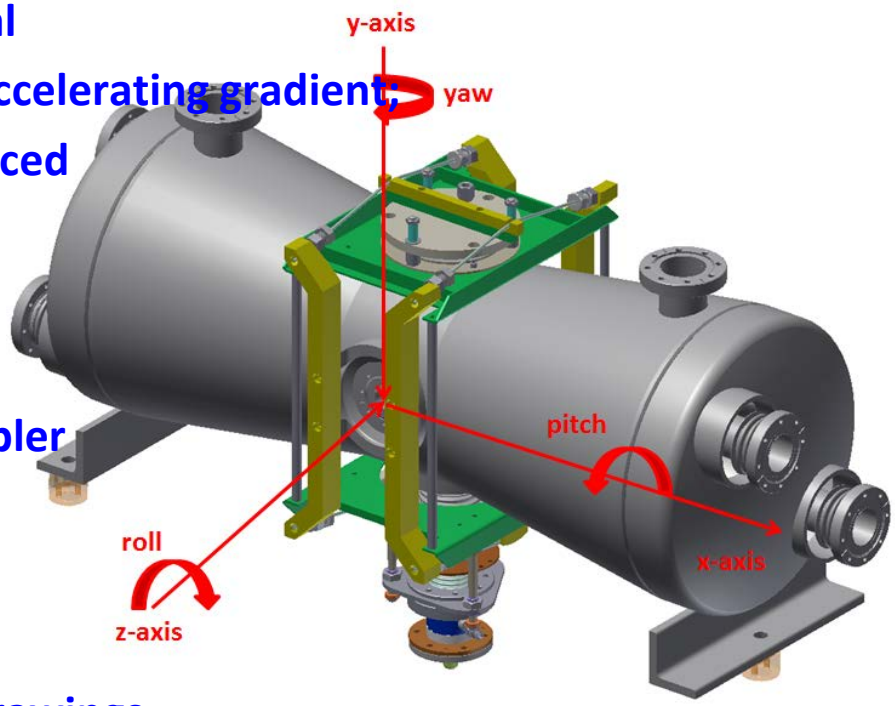

HWR – Fabrication Steps

- Forming of niobium parts (Deep drawing, hydroforming, die forming, machining)
- Wire EDM of EBW surfaces
- Electron beam welding
- Final wire EDM of the beam aperture
- Niobium-SS brazed transitions
- Installation of stainless steel helium vessel
- Cleaning, EP
- 625C baking
- Light EP, HPR
- Ready for cold testing

QWR

SS parts Niobium

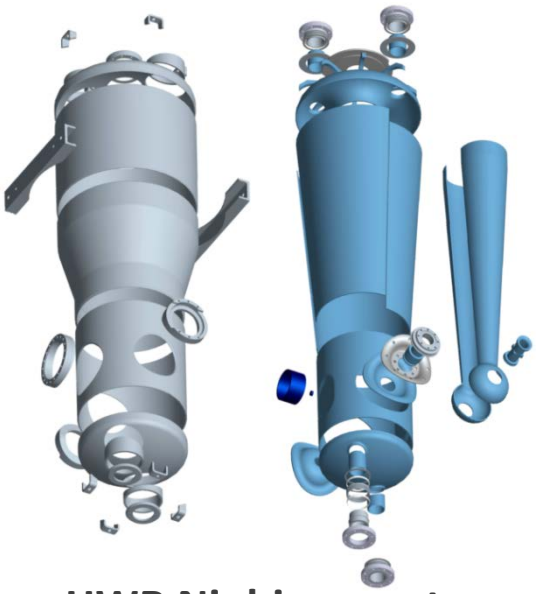

HWR Niobium parts

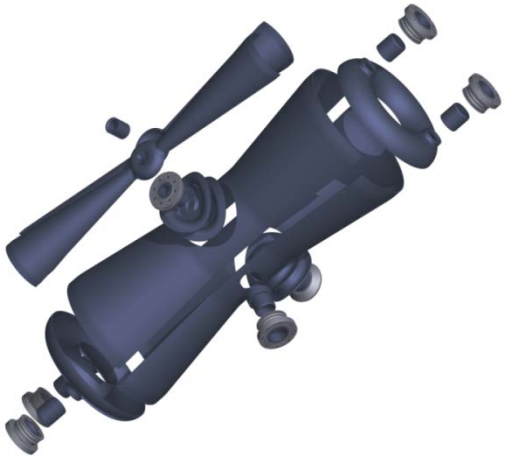

HWR (and QWR) Beam Aperture Alignment

- Design beam aperture = ϕ33.0 mm.
- Wire-EDM bore of the beam aperture gives very accurate results:
  - Aperture diameter tolerance ±0.04 mm.
  - Aperture Pitch and Yaw tolerance <0.1°.
- Wire-EDM is done prior to helium jacketing. This is expected to perturb the Pitch and Yaw alignment by <0.1 °.

Minimize Microphonics by Centering of Drift Tube in both QWRs and HWRs

Z →

⊙ X

Frequency Shift Due To Pendulum-Like Oscillations of Center Conductor

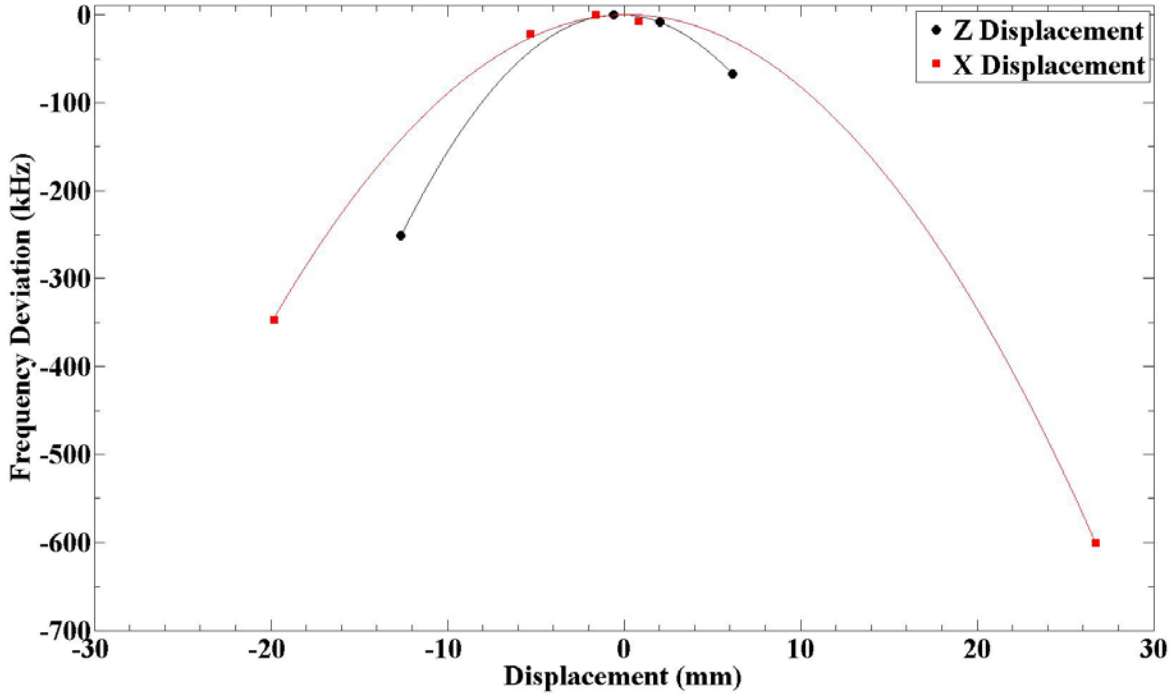

Peak-to-Peak Frequency Deviation For A Center Conductor Offset From Electrical Center Along Z.

Displacement (mm)	0	0.25	0.5	1
$\Delta f_{p\text{-}p}$ (Hz)	0.2	15	33	66

Electropolishing

Electropolishing is performed after all mechanical work including stainless steel helium vessel has been complete

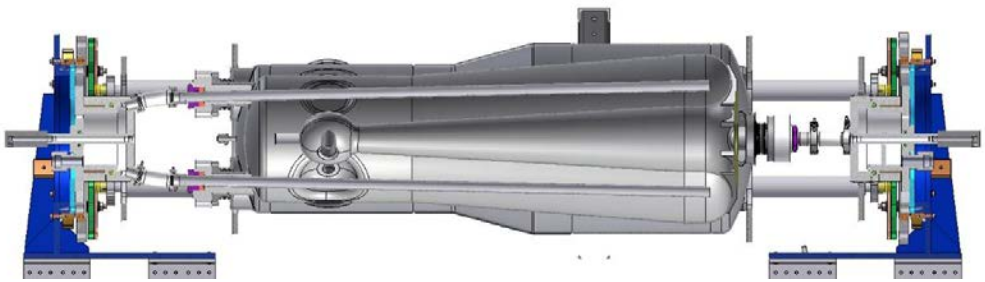

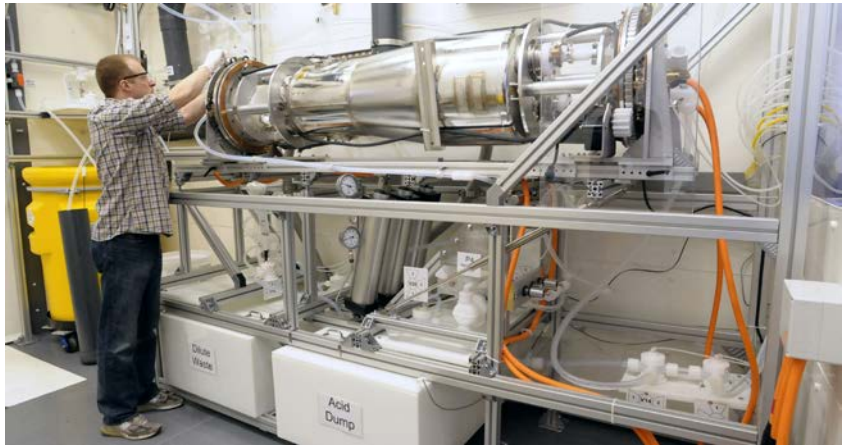

Cathode is parallel to the central conductor. Cooling through the He jacket

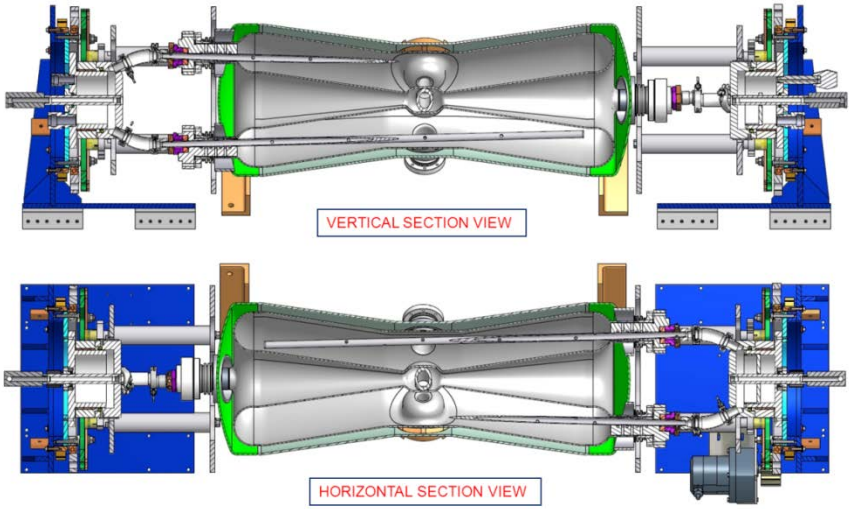

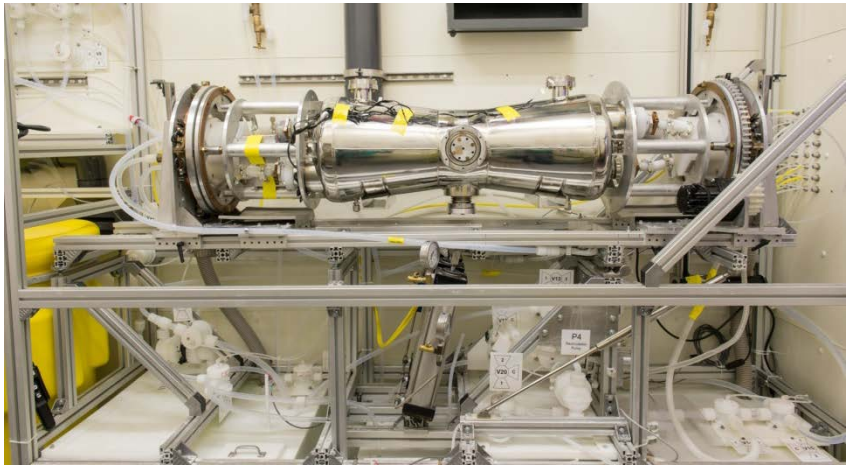

Measured 72 MHz QWRs Performance

- 5 cavities can operate at 62 MV/m and produce at least 3.75 MV accelerating voltage
- Operation at 2K is more economical
- No significant X-ray radiation at operational gradients

Off-line 4.5K and 2K

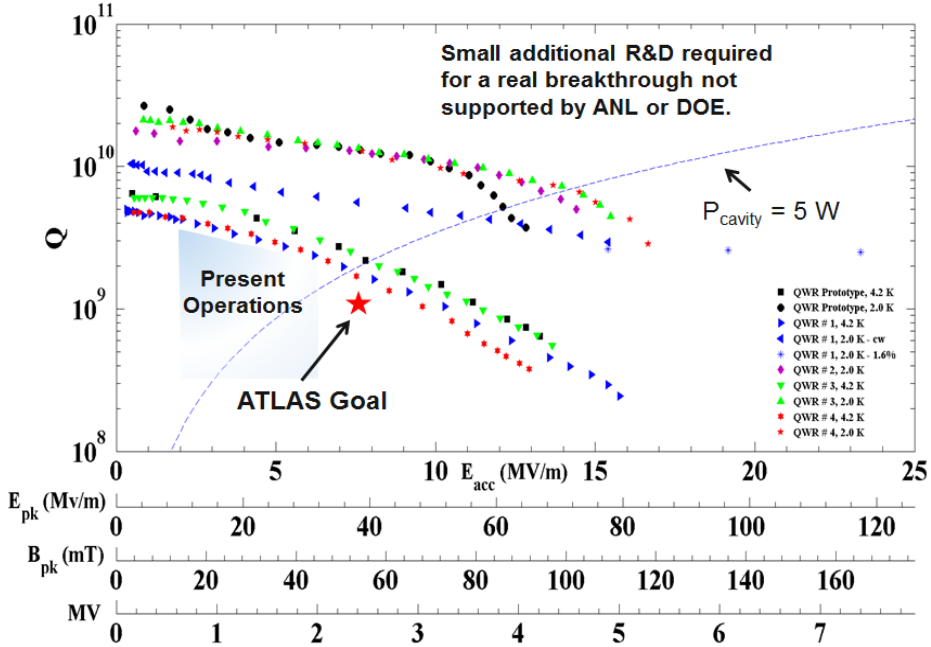

Residual resistance

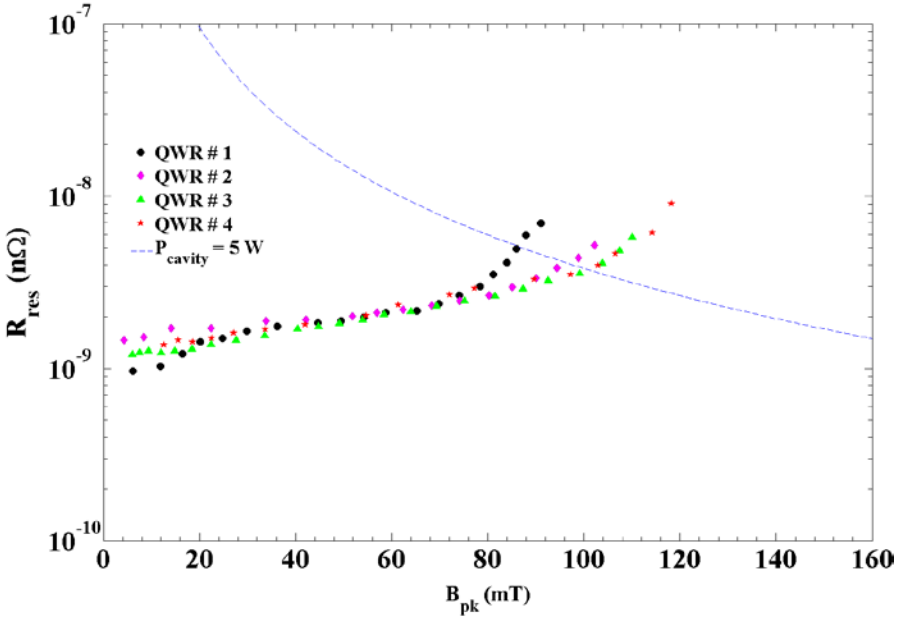

HWR Cold/RF Testing

- Performance sets a new world record in TEM-class cavities
- The star is the design specification
- Testing was done with adjustable coupler at critical coupling
- Residual resistance is <2.6 nΩ up to 14 MV/m
- Design field is 8 MV/m, $Q_0=7\times10^9$
- No X-rays observed below E_{ACC}=15 MV/m, or E_P= 70 MV/m

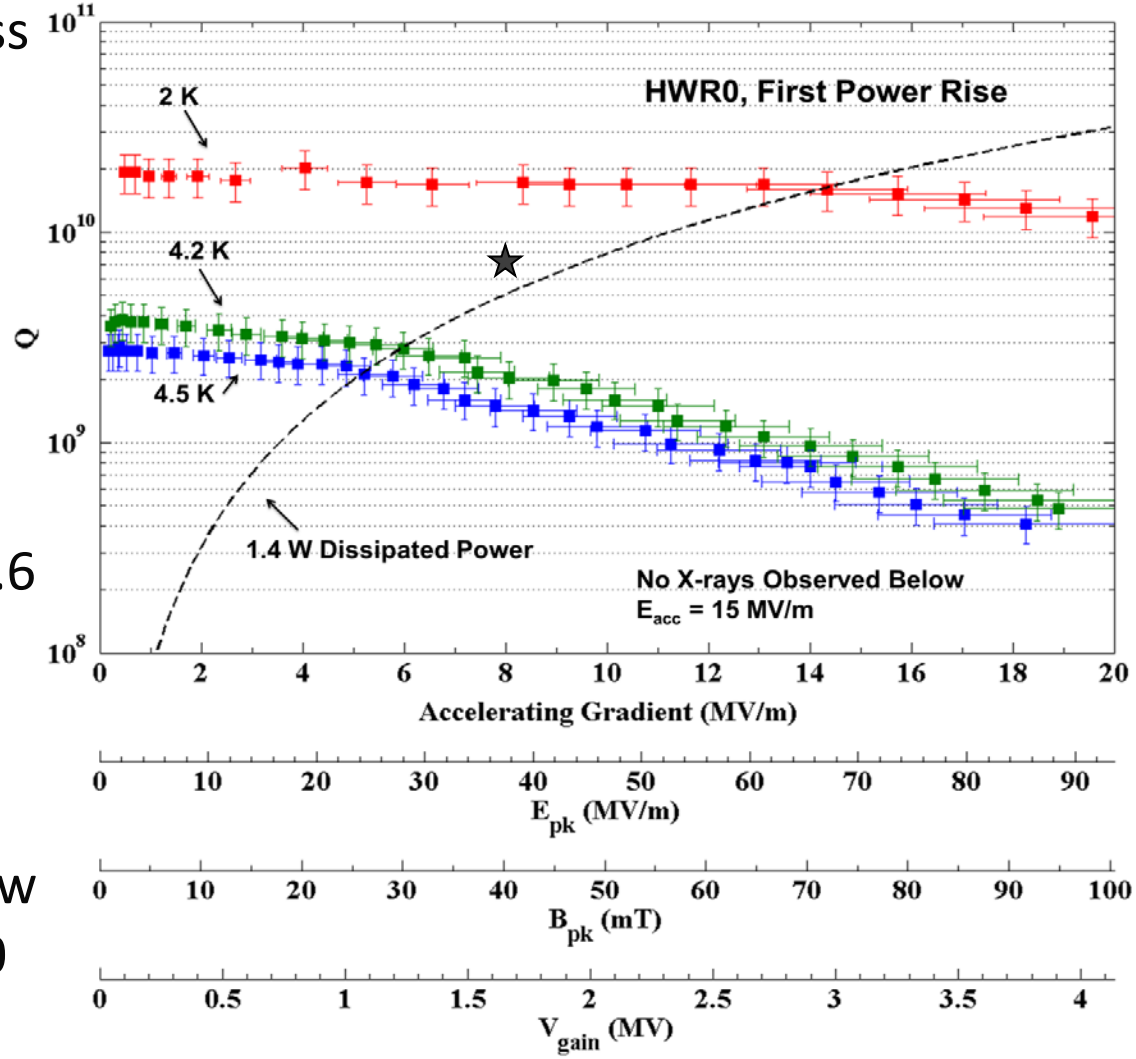

Kinematic-Alignment Hardware

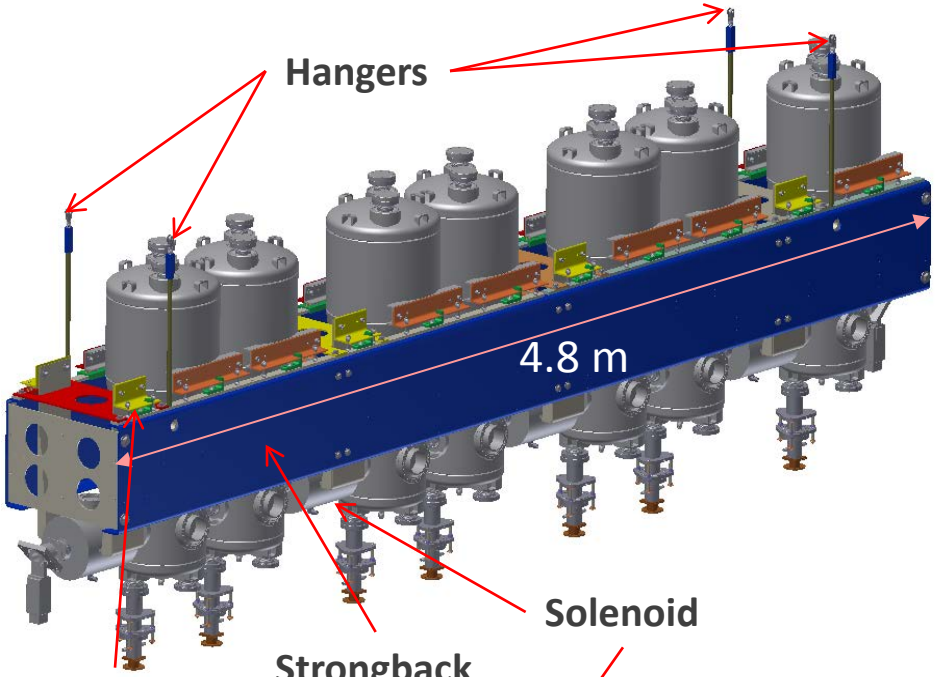

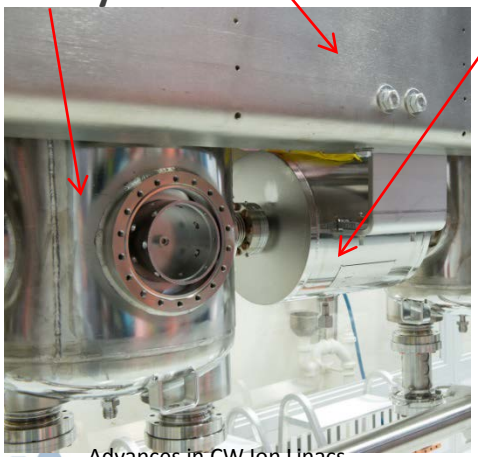

Kelvin Type Kinematic Coupling for Solenoid/Cavity Mount

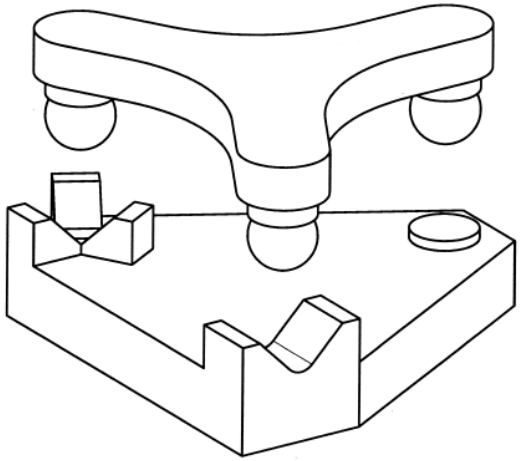

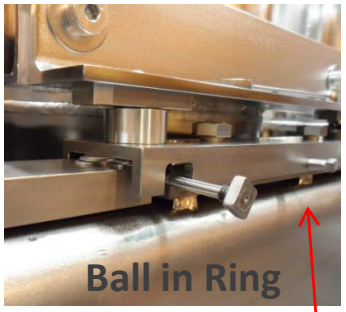

Alignment Results in Cryomodule at 4.5 K
(RMS deviations from the fitted beam axis)

	Solenoids	Cavities*
Horiz.	0.12 mm	0.50 mm
Vertical	0.18 mm	0.28 mm

Ball on Vee

Ball on Flat Surface

HWR Cryomodule

- 8 cavities 8 SC solenoids, 8 BPMa
- Compact design to handle high beam current up to ~20 mA protons
- SC solenoids equipped with return coil and 2-plane steering coils
- Off-line cold testing – 2016
- Installation at FNAL –early 2017
- Beam commissioning – end of 2017

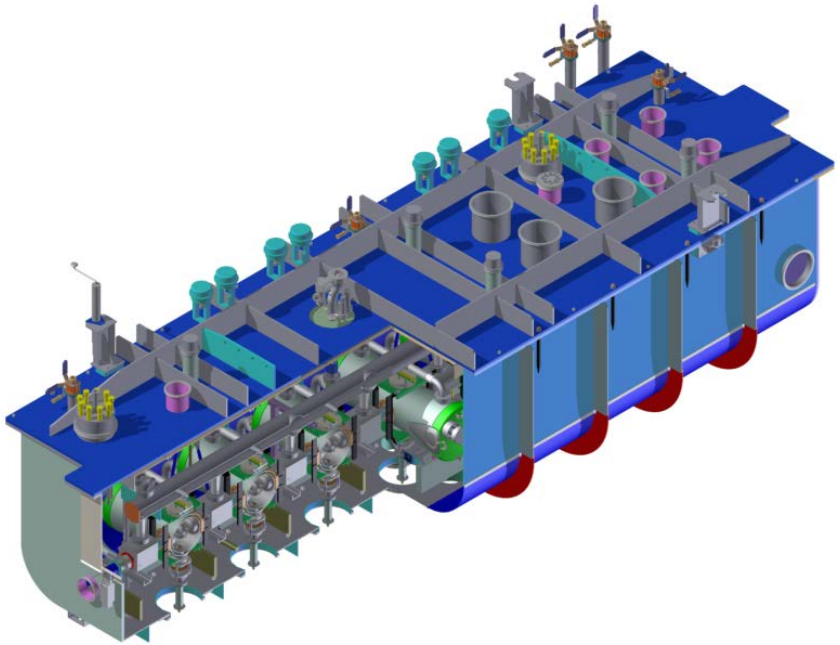

Parameter	Value
Length (beam ports)	5.93 m
Length (overall)	6.3 m
Width	2.1 m
Height	2.2 m

Alignment of cavities and solenoids in HWR Cryomodule

- 3-groove kinematic coupling (Maxwell-type)
- Cavity or solenoid center in the horizontal plane remains unchanged after cool down

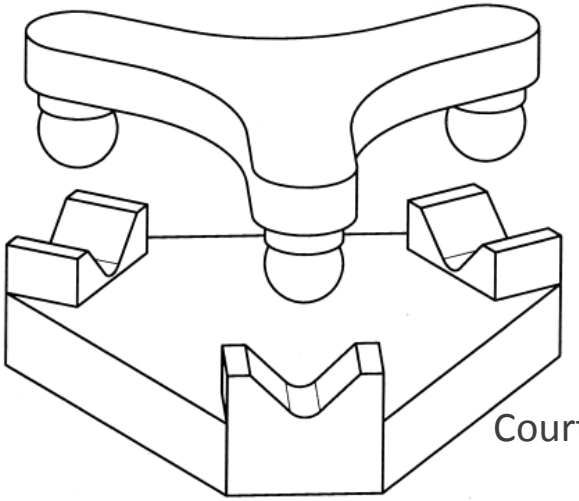

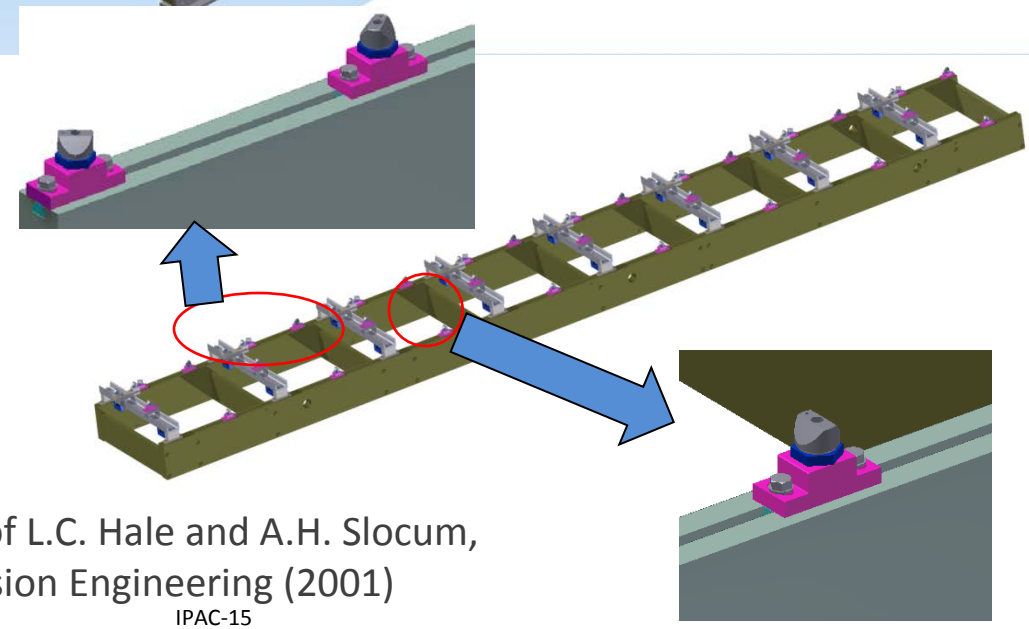

Courtesy of L.C. Hale and A.H. Slocum, Precision Engineering (2001)

Sub-Systems

15 kW adjustable RF input coupler. Adjustable, includes cold and warm ceramic disk windows

SC solenoid 3D model, includes main coil, bucking coils and X-Y steering coils. Proposed in Linac 2002 paper

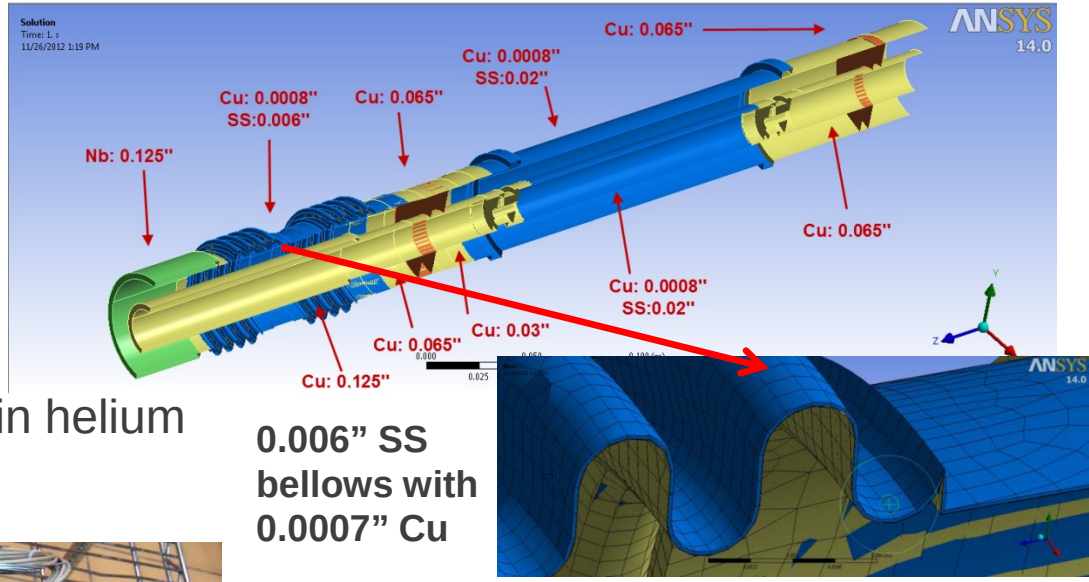

SC solenoid in helium vessel.

0.006" SS bellows with 0.0007" Cu

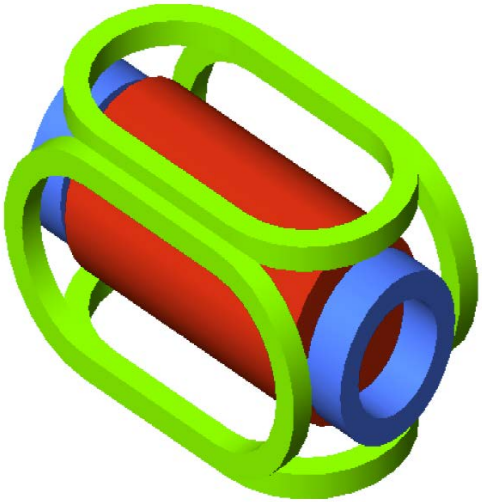

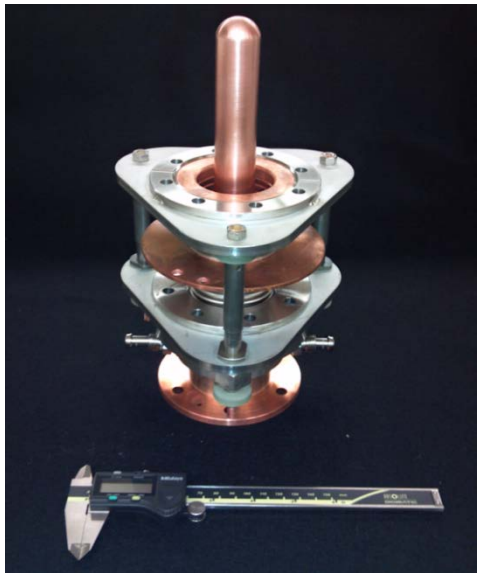

Solenoid focusing facilitates a short focusing period

Cold Testing of HWR with Solenoid

- To decrease the accelerator lattice length we have integrated x-y steering coils into the focusing solenoid package.
- Important design issue:
  - Minimize stray field @ the RF cavity to prevent performance degradation due to trapped magnetic flux.
- 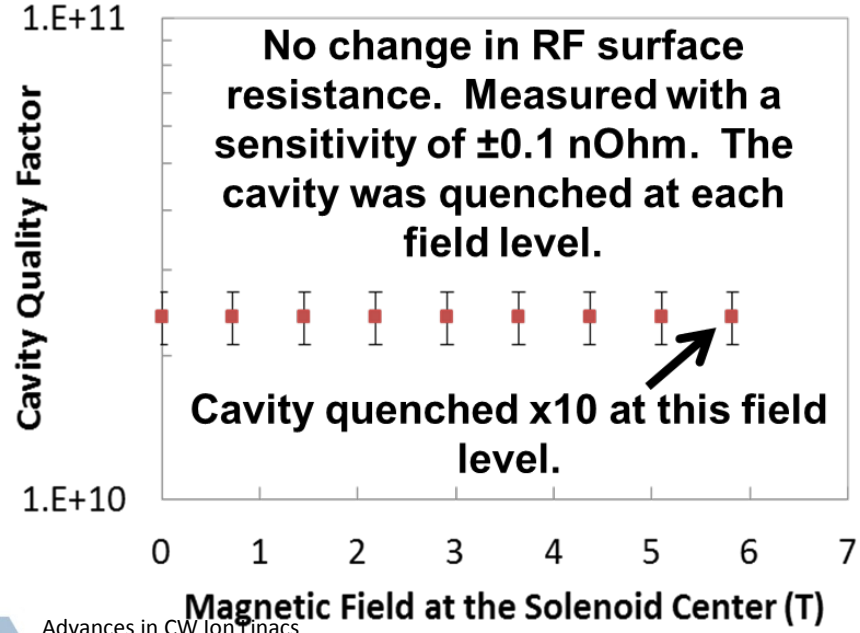

Half-Wave Cavity Assembled for Testing

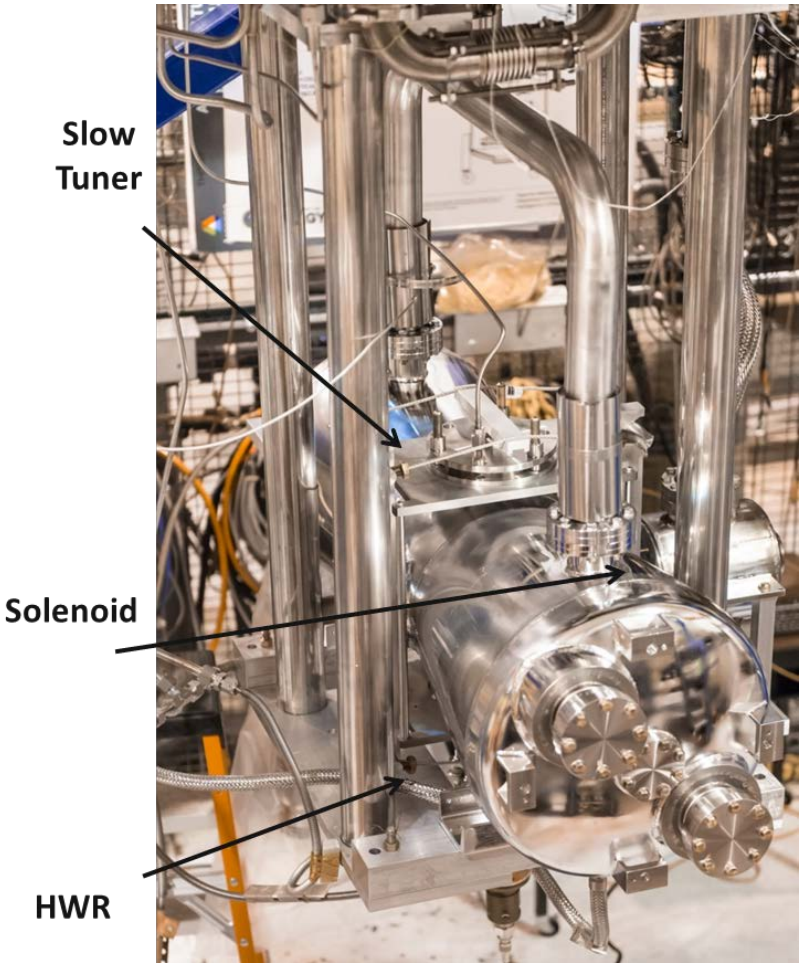

Cryomodule Assembly and Testing

- 4K cryomodule has been built and commissioned off-line
- In operation since April 1, 2014
- 2.5 MV average voltage per cavity in CW mode
- 17.5 MV total voltage

In Operation since April 1, 2014

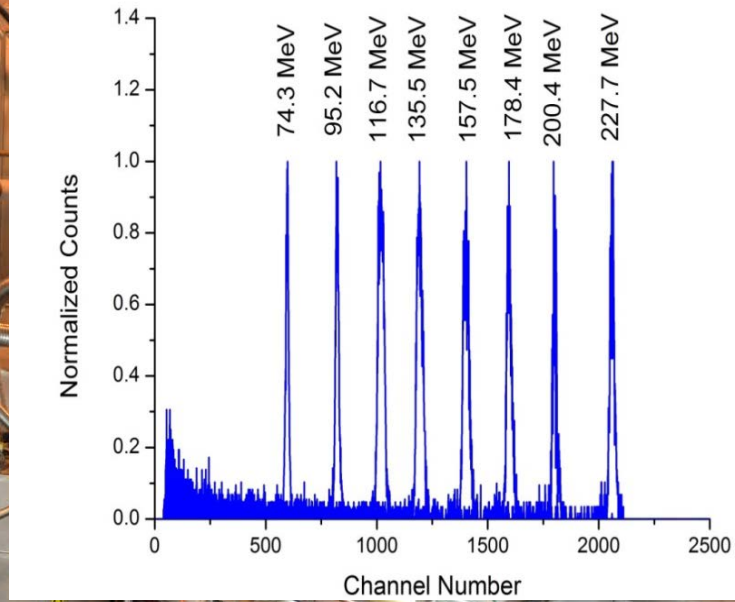

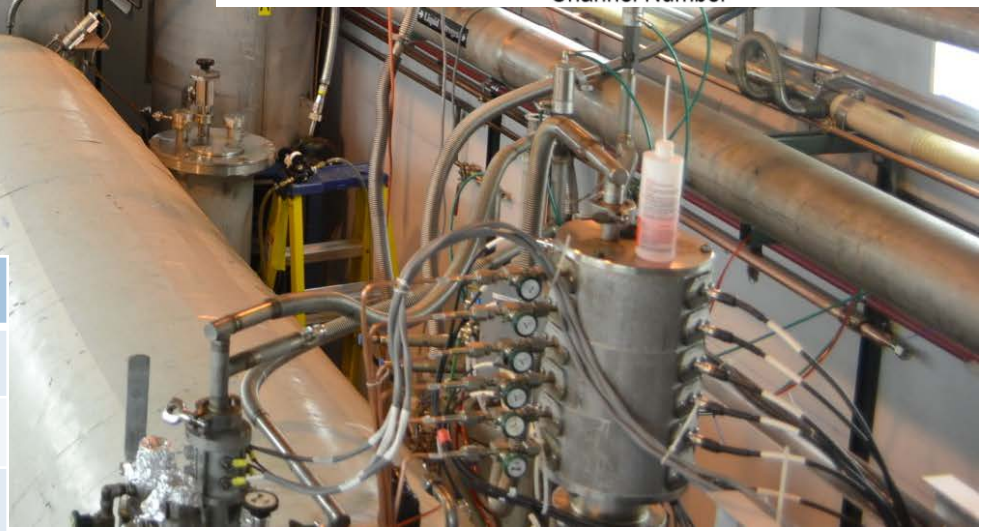

Average	Operational	Available
V_{EFF}	2.5 MV	3.75 MV
E_{PEAK}	40 MV	60MV/m
LHe, 4.5K	5 W	12 W

RF System

- Beam current up to 50 eμA
- 4 kW solid-state amplifiers
- Adjustable RF input couplers
- Currently 1.5-2.0 kW are sufficient to provide stable operation at 2.5 MV
- Bandwidth is 20 Hz to 25 Hz

Transmission line

Directional coupler, circulator, dummy load

25 mA 1 GeV Linac for ADS

- 3 MeV RFQ, 3 types of HWRs and 2 types of elliptical cavities
- 121 SC cavities (E_P=40 MV/m and B_P=70 mT) and 55 SC solenoids in 19 Cryomodules

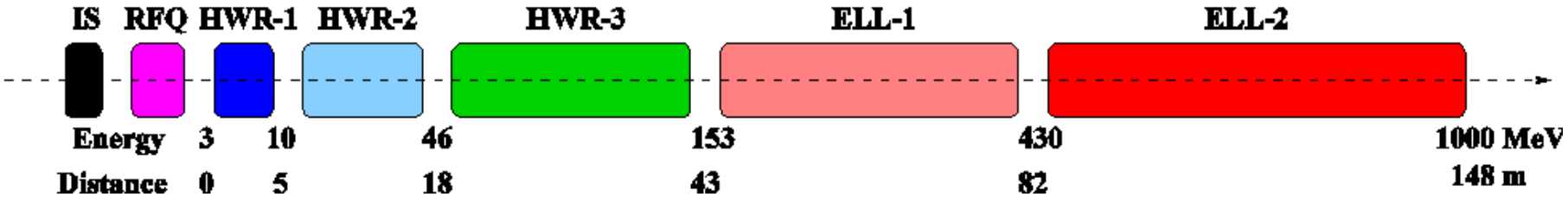

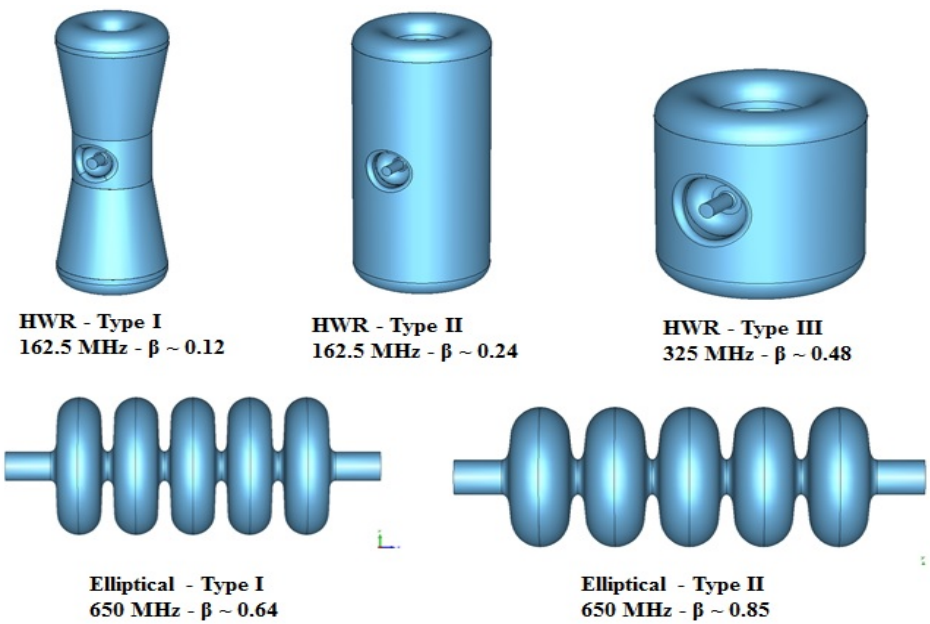

RMS and 99% emittance growth before and after optimization

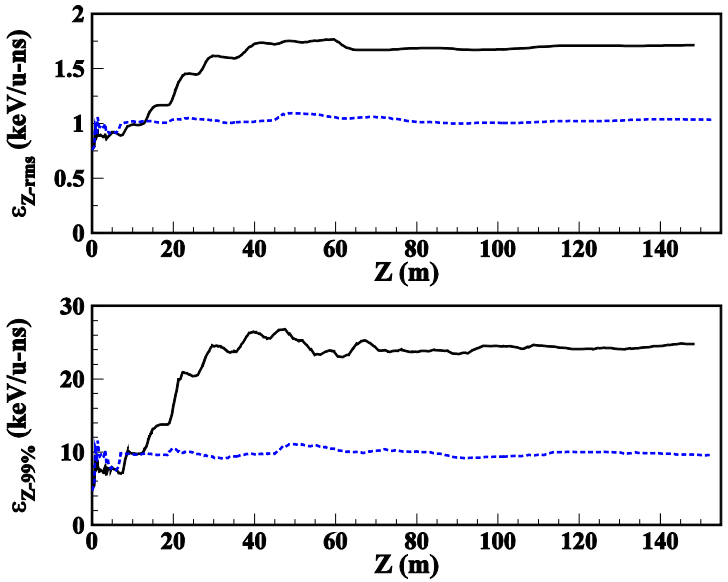

75 kW RF Coupler Design for HWRs

- Similar to 15 kW RF coupler
- 75kW average power
  - Based on 6 1/8'' coax
  - Warm and cold disk windows
  - Reflections less than -30dB

Thermal performance at resonance

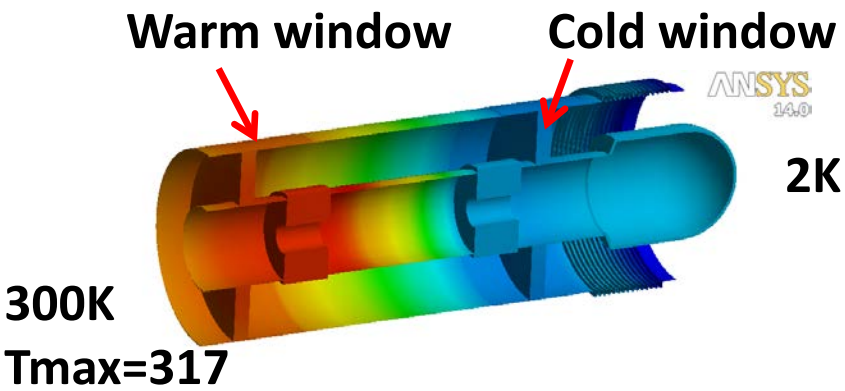

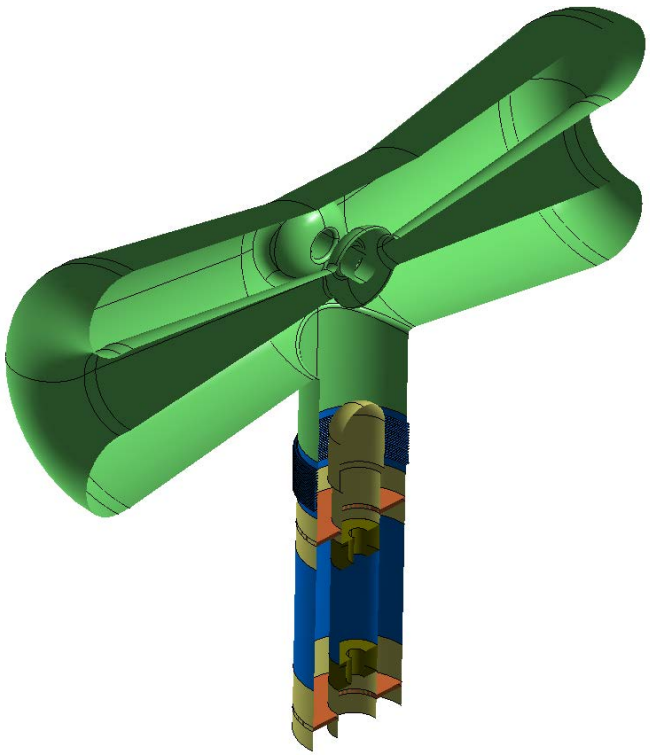

Parameter	Value		
Material	AL 300	AL 300	AL 995
Thickness, in	0.5	0.25	0.25
Max temp., K	316.9	303.9	302.0
Heat to 2K, W	7.8	7.2	6.6
Heat to 55K, W	72.5	54.0	47.6
Heat to 300K, W	24.1	11.2	3.0

Summary

- Advanced technologies developed at ANL are available for both normal conducting and superconducting accelerating structures for application in CW hadron linacs.
- A CW RFQ providing high quality ion beams has been in operation for several years with high reliability.
- The performance of the QWRs and HWRs is remarkable and sets a new world record both in terms of accelerating gradients and residual resistance (cryogenics load).
- The first cryomodule with 2K TEM-class cavities will be operational with beam in 2 years. The cryomodule is being developed and built and ANL, will be installed at FNAL and commissioned with beam
- Limited R&D is required for the development and construction of a 25 MW driver linac for ADS or for transmutation of spent nuclear fuel.

Acknowledgements

ANL

- A. Barcikowski
- G. Cherry
- Z. Conway
- S. Gerbick
- M. Kedzie
- M. Kelly
- S. Kim
- S. Kutsaev
- R. Murphy
- B. Mustapha
- J. Nolen
- T. Reid

FNAL

- V. Lebedev
- A. Lunin
- Accelerator and Technical Divisions

Major Vendors

- Advanced Energy Systems
- Meyer Tool & Mfg

THANK YOU FOR YOUR ATTENTION